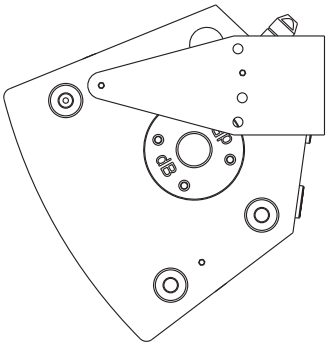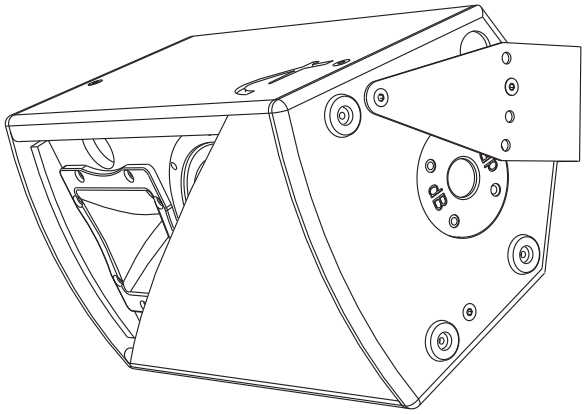Optional code:
WB A08 for ARENA 8
WB A10 for ARENA 10
WB A12 for ARENA 12
WB A15 for ARENA 15